PRODUCED BY AN AUTODESK EDUCATIONAL PRODUCT

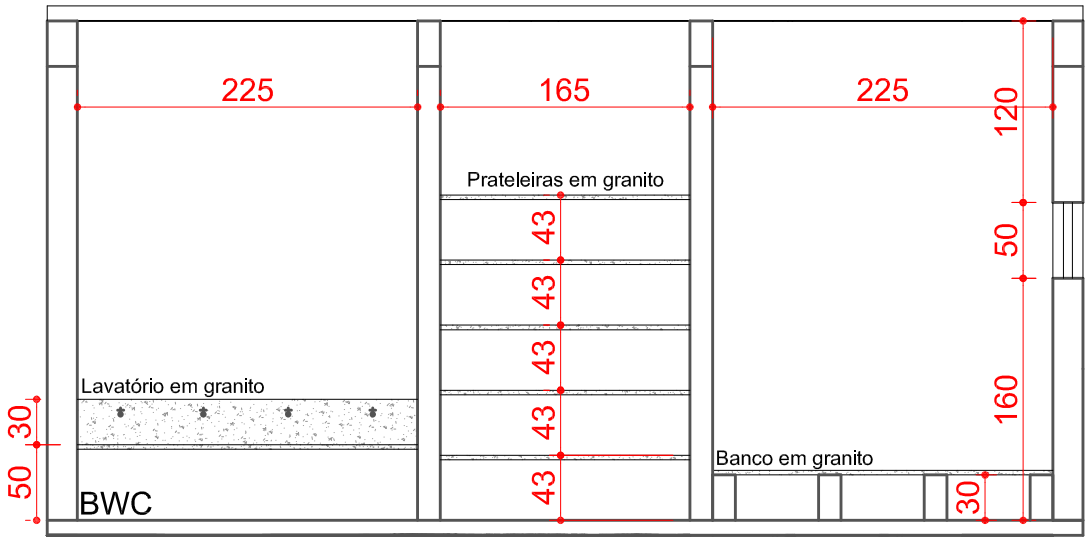

Vista banheiros

Esc. 1:75

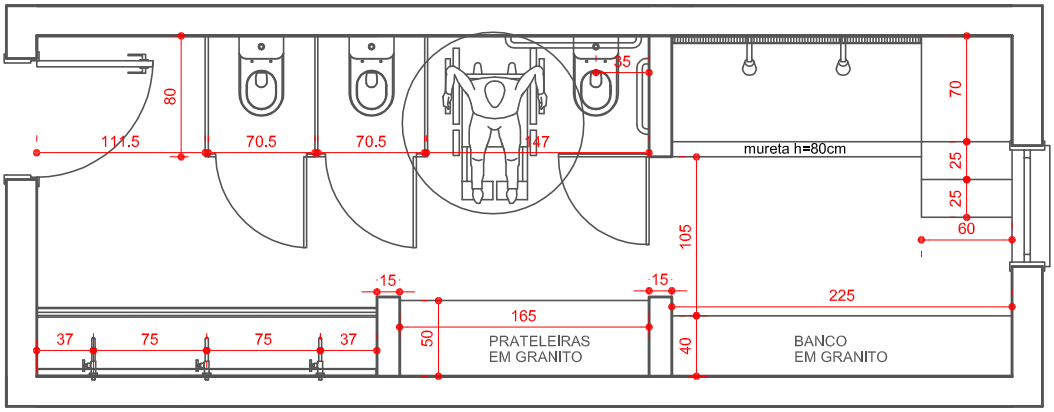

Vista planta baixa banheiros

Esc. 1:75

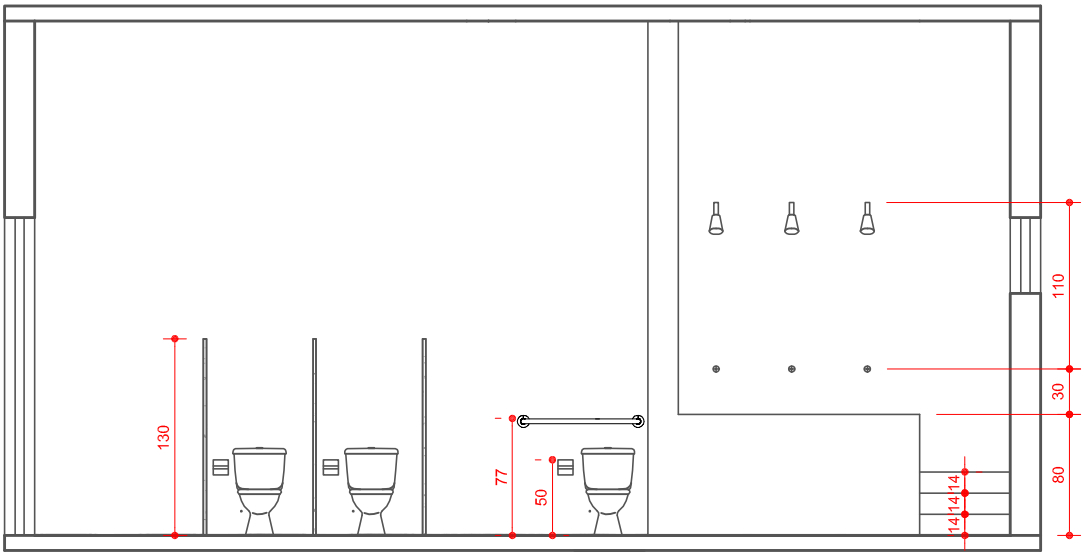

Vista banheiros (x2)

Esc. 1:75

PRODUCED BY AN AUTODESK EDUCATIONAL PRODUCT
PRODUCED BY AN AUTODESK EDUCATIONAL PRODUCT
PRODUCED BY AN AUTODESK EDUCATIONAL PRODUCT